CANADIAN RAILROAD HISTORICAL ASSOCIATION
INCORPORATED.
MONTREAL, CANADA

NEWS REPORT NO. 64 FEBRUARY 1956

NOTICE OF MEETING:

The regular monthly meeting of the Association will be held in room 920, Transportation Building, 159 Craig Street West, Montreal at 8:00 PM on Wednesday, February 8th, 1956. Election of new members will take place, followed by a talk by Mr. Robert R. Brown on the subject -- "Broad Gauge Days of the Grand Trunk Railway" This is the first of a series of topical lectures in this anniversary year, which commemorates the centenary of the completion of the GTR between Montreal and Toronto, the 120th anniversary of the opening of Canada's first railway, the 75th anniversary of the incorporation of the Canadian Pacific Railway, and the 70th anniversary of the opening of the same line between Montreal and Port Moody. As usual, guests are cordially invited to attend.

THE ANNUAL MEETING

As a result of the elections held at the Annual Meeting on January 11th, the following officers were elected to the executive for the year 1956:

Honourary President:	Dr. Victor Morin, President, the Antiquarian & Numismatic Society of Mtl.
Honourary Vice Presidents:	N.R. Crump, President, Canadian Pacific Railway Co.
	A. Duperron, Chairman, Montreal Transportation Commission.
	C.E. Fisher, President, the Railway & Locomotive Historical Society.
	D. Gordon, President, Canadian National Railways.
	E.G. Hooper, President, National Railway Historical Society.
Honourary Legal Counsel:	Leonard A. Seton.
Executive President:	S.S. Worthen.
Executive Vice President:	O.S.A. Lavallee.
Treasurer:	Anthony Clegg.
Recording Secretary:	John Saunders.
Corresponding Secretary:	R. Douglas Brown.
Advisory Committee of Directors:	R.M. Binns
	R.R. Brown
	K.F.G. Chivers.

Chairman of Standing Committees:

Entertainment:	K.F.G. Chivers
Editorial:	O.S.A. Lavallee
Rolling Stock:	Forster A. Kemp
Trip:	Jno. Marjoribanks Jr.
Museum:	William Pharoah
Membership:	W.F.G. Doran - O.S.A.Lavallee (joint).

REMEMBER, 1956 IS EXHIBITION YEAR AT THE CHATEAU DE RAMEZAY !!

Since issuing, last month, list of publication back copies available, following News Reports are now out of print:
11,13,14,24,27,32,35,36,50,56. Others still available.

Construction is proceeding on a number of new Canadian railway projects. The one closest to Montreal is probably the relocation of about 40 miles of the Cornwall Subdivision of Canadian National Railways. Track laying was begun in December and grading and culvert work are well advanced. The new double-track line will carry trains around those sections of the present route which will eventually be flooded by impounded waters of the Saint Lawrence Seaway System, between Cornwall and Iroquois, Ontario.

☆ Another CNR project rates as the most ambitious one currently being undertaken extending between Beattyville and Chibougamau, Quebec. By the end of 1955, grading and roadbed were practically completed as far as Bachelor Lake at mileage 70. Track had been laid to mileage 49, but will probably stop at the O'Sullivan River, mileage 52, until the bridge at that location is completed. Concrete foundations have been poured for this span, largest on the 160-mile route. Two wooden trestles have been completed at Lake Opawica, mileage 82, where the line will cross an island to reach the west side of the lake. The line is scheduled to be in operation late this year.

☆ A work train recently became the first one to operate on the North Vancouver extension of the Pacific Great Eastern Railway, when it ran from North Vancouver to Cypress Creek in West Vancouver. This portion of the line was previously built and operated as far as Whytecliffe, but was later abandoned and has had to be rebuilt. The complete line to Squamish is expected to open in June 1956.

☆ The Quebec North Shore & Labrador Railway recently announced that it would apply to the next session of the Federal Parliament to extend the time for completion of its line for ten years from May 14th, 1957. This is understood to be a precautionary measure so that the company will have authority to extend its line, should this become necessary in the future.

☆ Names have been applied to four of the intermediate stations on the Terrace-Kitimat line of the Canadian National Railways, which was completed early in 1955. The stations are: THUNDERBIRD, mile 7.5, named from the mythology of the Skeena Indians. LAKELSE, mile 13.4, named from the Lakelse River and lake. DUBOSE, mile 21.5, named after McNeely DuBose, Vice President of the Aluminum Company of Canada Limited, and WEDEENE, mile 32.9, named from the Wedeene River.

☆ The Pacific Great Eastern Railway has ordered five self-propelled Diesel rail cars at a cost of $200,000 each. These 80-passenger vehicles will provide a 16-hour service between North Vancouver and Prince George on a daily basis beginning next summer. At present, the journey requires 27 hours by steamer and mixed train, operating three times each week. Many of the coaches and sleeping cars in the present consist came from interurban electric lines in the United States, while others came from standard railroads, and the Pullman Company. In summer, an open-top observation car is included and makes an excellent vantage point from which to view the spectacular scenery.

☆ The Canadian Pacific Railway has leased the RDC-1 demonstrator car from the Budd Company, Philadelphia, U.S.A., and is operating it in the Montreal-Quebec service between the CPR's own cars 9057 and 9023. This relieves a shortage of space which developed after the RDC units were introduced on trains 349 and 352. It also eliminates the need for using engine 3004 to haul the Budd cars with extra coaches on Friday evenings, returning Saturday morning. This had been a regular practice, each weekend, since September 25th. The last trip of this kind was made January 13-14. The demonstrator car, no.2960, was the first Budd RDC, built in 1949. It was toured by the CNR in 1950 and by the

CPR in 1953. During both of these tests it sustained heavy damage as a result of collisions with highway vehicles. The two ends are now slightly dissimilar due to design changes which have been incorporated while repairing one end after being damaged.

* Marine services are an important part of the Canadian railway system and have been changed considerably during the past year by various circumstances. There are now six Canadian railways in the marine business; these are Canadian Pacific, Canadian National, Ontario Northland, Algoma Central & Hudson Bay, Pacific Great Eastern and the White Pass & Yukon Route. The PGE will be replacing its present barge transfer between Vancouver and Squamish with a rail line in June, while the WP&Y recently established a subsidiary known as British Yukon Ocean Services, Limited, to carry freight between Vancouver and Skagway. The "Clifford T.Rogers" a specially-designed vessel, was built by Canadian Vickers Limited in Montreal for this service during 1955.

* CNR steamer services are probably the best known, if only for the incident of the MV "William Carson". This vessel was built during 1954-55 for the North Sydney, NS to Port-aux-Basques, Nfld. passenger, freight, and automobile route. After completion, it was found that the vessel was too large to operate safely at Port-aux-Basques harbour. It now carries freight traffic only between North Sydney and Argentia, Nfld.

* Another new CNR ship fared much better when entering service. the MV "Bluenose" began a new ferry service between Yarmouth, NS, and Bar Harbour, Maine, USA on January 4th, 1956. the "Bluenose" left Yarmouth at 9:00 AM and arrived at Bar Harbour at 3:20 PM. It had been scheduled to arrive at 4:30 PM only. Westbound voyage is made Monday, Wednesday and Friday, returning Tuesday, Thursday and Saturday.

* It has been reported that the CNR train ferry "Scotia II" has been purchased by Black Ball Ferries, Limited, of Vancouver. This was one of two CNR train ferries formerly used to connect the rail lines on Cape Breton Island, with those of the mainland. They plied between Point Tupper, and Mulgrave, NS until the opening of the Canso Causeway during 1955.

* The CNR is also purchasing two small coastal vessels for its Newfoundland fleet. To carry names "Bonavista" and "Nonia", the diesel-powered ships are being built at Aberdeen, Scotland. The "Bonavista" is expected to be delivered in the first week of April, followed by the "Nonia" about one month later.

* Although the substitution of busses for streetcars on St.Catherine Street in Montreal is not due to take place until September 4th, the Montreal Transportation Commission is taking steps to make the change in equipment. The Hochelaga carbarn, between St.Catherine and Notre Dame streets at Harbour street, is being demolished to make way for a new bus garage, which will also house the Frontenac Terminal. This carhouse is one of the oldest on the system having been built in 1898, following destruction by fire of an earlier structure at this point. The MTC's recent order for new busses includes 175 CC&F, 50 Mack and 25 GMC vehicles. (See report this issue on St.Catherine change.)

* The Association's car, MSR #274 has been moved from St.Paul carhouse to St. Henri division. MTC cars #200, 350 and the four observation cars are also kept there. No.200 has been engaged in publicizing the first full year of "Cinerama" in Montreal.

* Disruption of the CNR's Centralized Traffic Control installation between Moncton and Truro, in the Maritimes, was out of order for more than a week as a result of the recent severe storms in the eastern areas. Amateur radio operatores relayed train orders across breaks in the regular communication system.

THE ATLANTIC TYPE IN CANADA

by Omer S.A. Lavallee

An examination of the steam motive power used on Canadian railways since their inception some one hundred and twenty years ago, reveals a particularly consistent trend in wheel arrangement. Canada had thousands of engines built to the most popular wheel arrangements, the 4-4-0's, 4-6-0's, 2-6-0's and 2-8-0's, to be followed later by Pacifics, Mikados, Northerns and Mountains. On the other hand, there are certain types which were all but neglected, and it is with one of these types that we are concerned.

At the turn of the century, the 4-4-2 or Atlantic Type locomotive was the "engine of the hour" below the border. Hundreds were built for United States railways, and as a result of their popularity and their numbers, many have survived to our day, particularly the distinctive Atlantic types of the Pennsylvania Railroad. to name but one design. In Canada, such was not the case and were it not for a rather intense rivalry for the Montreal-Ottawa passenger traffic which came about in the last years of the Nineteenth Century, between the Canadian Pacific Railway Company and its arch-rivals, the Grand Trunk and the Canada Atlantic systems, the Atlantic type may never have made its appearance on a Canadian railroad. As it was, the only six Atlantics built in Canada were not really Atlantics at all in the strictest sense; in effect, they were 4-6-0's with a disconnected rear pair of driving wheels.

Aware of the tremendous speeds which were being attained daily by the 4-4-2 type on United States roads, the Canadian Pacific Railway set about to design an Atlantic type of its own, to offer effective competition to its contemporaries. For a few months, the CPR Mechanical Department under Mechanical Superintendent Roger Atkinson was busy with designing and building. In July, 1899, the Company shops at Montreal, then located on Delorimier Avenue between Notre Dame and St. Catherine, outshopped three 4-4-2 types, Nos.209, 210 and 211. The ST4 class, as it was known, was capable of tremendouse speeds due principally to the comparatively high boiler pressure (for that time) of 210 pounds, the 83" driving wheels, and the weight distribution, whereby 97310 pounds of the total engine weight of 170250 pounds rested on the four driving wheels. Instead of incorporating the rear pair of wheels in a swivelling trailing truck, they were attached directly to the frame, like a pair of drivers. This gave the ST4 class, a total rigid wheelbase of 14'6", comparable to that of a 4-6-0, but without the weight of the heavier reciprocating parts on the six-drivered locomotives. The trailing, or "carrying" wheels were 58" in diameter, as large as those of a small-drivered freight locomotive.

Those three Atlantics were the 295th, 296th and 297th engines built by the CPR, and they were Vauclain compounds. In this compounding system, each of the main rods connected to a double crosshead which was in turn actuated by a pair of pistons in the high- and low-pressure cylinders. These cylinders were superimposed upon one another, the valves being just behind the high-pressure cylinders. The half-front elevation of the locomotives shown on the excellent diagram prepared by Mr. G.A. Parker which illustrates this article, shows this cylinder and valve arrangement. The double crossheads can be seen in the side elevation.

Eventually, when the brief popularity of the compound engine was over, the first two of the class were rebuilt to simple engines and designated class F4b. The remaining compound remained F4a. During their nineteen-year career, the engines remained for the most part on the Montreal-Ottawa run, though No.211 as No.952 strayed as far afield as Toronto, in later years. All were scrapped in 1917, though their boilers were used as stationary boilers at the Outremont roundhouse in Montreal until the closing of the shop in 1950, when they were scrapped.

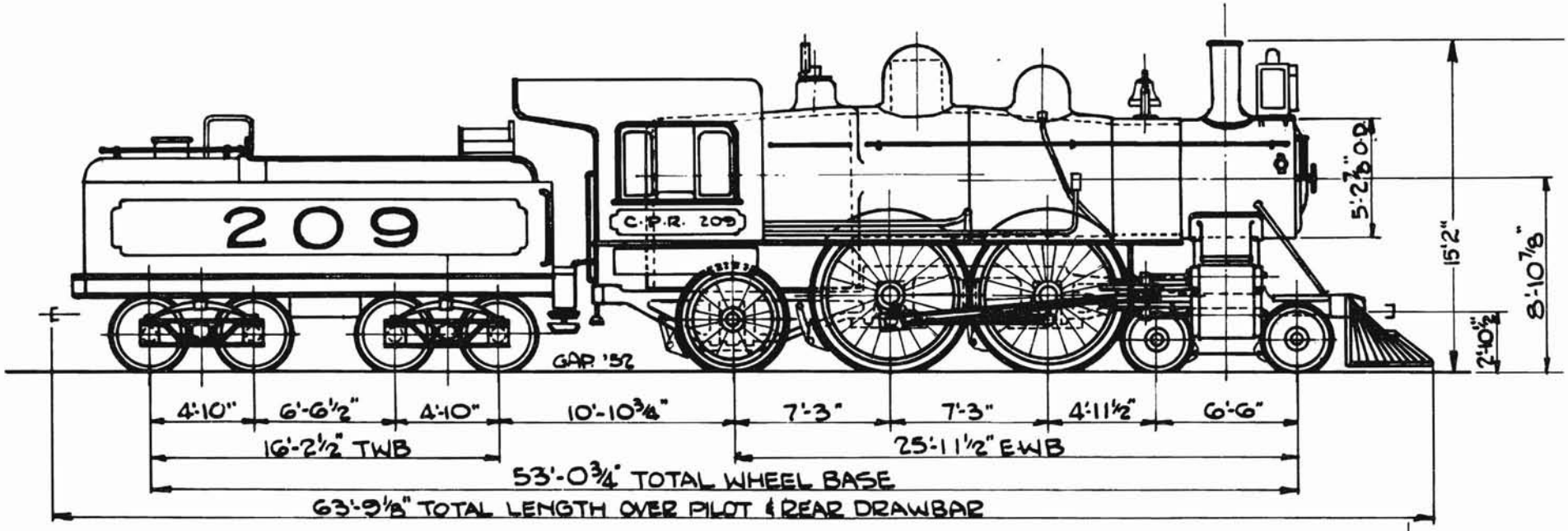

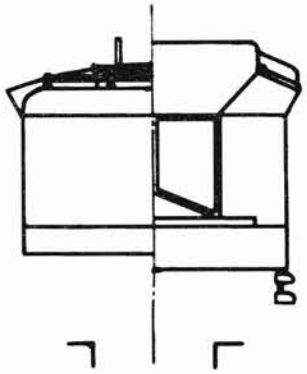

CANADIAN PACIFIC - CLASS F-1a.* - 4-4-2 VAUCLAIN COMPOUND

CYLINDERS - 13 1/2" & 23" x 26" BOILER PRESSURE - 210#

LEADING WHEELS - 36" DIA. DRIVING WHEELS - 84" DIA. - 19 SPOKES

CARRYING WHEELS - 58" DIA. - 14 SPOKES

TENDER WHEELS - 40" DIA.

TOTAL WEIGHT ENGINE - 171,000

BUILT - C.P.R. JULY 1899 - BLDRS No 1295-6-7

RENUMBERED # 1000 IN 1902

REBUILT SIMPLE - 20" x 26" IN 1905

RENUMBERED # 950 IN 1910

RENUMBERED # 2150 IN 1912

SCRAPPED - 1917

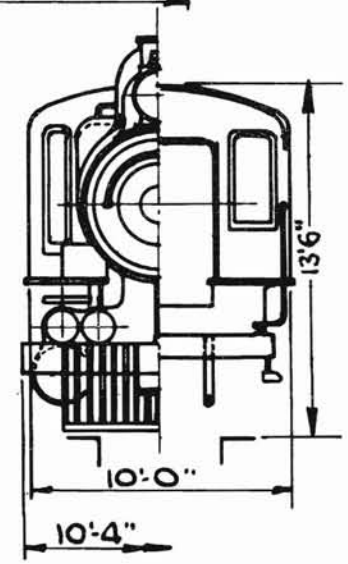

* ORIGINAL CLASS S.T.4

DWG. 442-1

GREYDON A. PARKER - DEL.

A builder's plate from one of these boilers is presently the proud possession of Mr. J.Norman Lowe of this Association, the only remaining relic of the Canadian Pacific's three Atlantic types. Coincidentally enough, as we shall see in our next part, the Canada Atlantic 4-4-2's were scrapped in the same year as the CPR engines, 1917, by the Grand Trunk Railway.

NEXT PART: April - Covering the Canada Atlantic Railway 4-4-2's.

CANADIAN PACIFIC RAILWAY COMPANY
SPECIFICATIONS - ATLANTIC TYPE

Original class ST4, built 1899 - Engines 209, 210, 211
New class Fla 1905 - Re# 1000, 1001, 1002
1000, 1001 rebuilt simple and superheated, classified Flb
1910 - Re# 950, 951, 952.
1912 - Re# 2150, 2151, 2152.
1917 - All scrapped.

	Class Fla	Class Flb
Boiler pressure	210#	same
Superheater	none	Vaughan & Horsey
Firebox dimensions	3'6-5/8"x9'1-7/8"	same
No. of Tubes	284 small,	163 small, 22 large
Length of Tubes	15' 1/16"	same
Dia. of Tubes	2"	2" & 5"
No. & Dia. Superheater Tubes	88no	88 x 1½"
Superheater surface	none	390 sq.ft.
Firebox heating surface ..	170 sq.ft.	170 sq.ft.
Firetube heating surface .	1689 sq.ft.	2231 sq.ft.
Total fire htg.surface ...	1859 "	2401 "
Grate area	32 "	32 "
Cylinders	13½&23x26"	20x36"
Driving Wheels	84"	84"
Weight on Driving Wheels .	97,310 pounds.	
" Total Engine	170,250 "	
" Tender, loaded	105,000 "	
" " Light	44,000 "	
Water capacity	4,500 Imperial gallons.	
Coal capacity	10 Tons.	

LOCOMOTIVE NOTES

The largest locomotive in Canada when built, and still the largest on the Canadian National Railways, No.4100 is now the last survivor of class T2e (formerly T2a). These engines were built by the Canadian Locomotive Co. in 1924 for transfer and helper service between Danforth and Mimico and were used in that work until displaced by diesels last year. Engines 4100 and 4102 were transferred to Montreal and used in transfer service between Turcot and Longue Pointe. The others: 4101, 4103 and 4104 were stored at Stratford and have now been written off. In January No.4102 was held out of service for needed repairs, and it would appear to be only a matter of time before it, too, is written off and scrapped.

(continued page 16)

The tenth
in a series on the
CANADIAN NORTHERN RAILWAY
by Anthony Clegg.

CANADIAN NORTHERN RAILWAY

Toronto, Ontario,
September 30, 1912.

Have just returned after inspecting the line of the Central Ontario Railway, which we took over recently; the services first appearing in our current Timetable #27, issued August 25th. The territory traversed by this line is not anything like as thickly settled as I had imagined, and it seems strange that an area within the Montreal-Toronto Ottawa triangle and so close to the centre of things in this country, as it were, should be so wild and uninhabited. But the lumber industry, which supports both the communities and the railroad is looking forward to a prosperous future, and there is no reason why the Canadian Northern should not share in this prosperity. In addition, the area north of Trenton would appear to offer a favourable district for future mining developments.

The main community served by the railway is Bancroft. It is a fair-sized town, nestling in the Valley of the York River, close to the point where the C. O. Ry. meets the Irondale, Bancroft, and Ottawa Railway. The two-stall enginehouse at this point is equipped for performing light repairs to the motive power and rolling stock while other facilities include a fifty-foot turntable and a 20,000 gallon tank.

The operation of the Royal Line of Steamships continues to vindicate the wisdom of engaging in the Atlantic trade. The increasing popularity of the route emphasizes the need for expanding the services, but recent negotiations with a view to enlarging the fleet of vessels did not work out satisfactorily.

I do not think I mentioned to you previously the fact that, through our subsidiary, Canadian Northern Steamships, we are operating the two fastest steamers in the British - Canadian service. Regular service on a fortnightly basis between Bristol, Quebec and Montreal, was inaugurated in May, 1910, and the results of the last three seasons' operations have been quite satisfactory. The "Royal Edward", and the "Royal George" are Triple Turbine vessels of over 12,000 tons each, and were built by The Fairfield Company of Glasgow. In addition to passengers and cargo, they handle His Majesty's Mails at a speed in excess of 20 knots.

This is not, of course, the first venture of the Canadian Northern into the Steamship business. With the acquisition of the Niagara, St. Catharines and Toronto Railway a few years ago, we also received the N. S.& T. steamer services across Lake Ontario to Port Dalhousie. Just a year ago last August we took delivery of the Dalhousie City, a new vessel to supplement the service given by the Garden City. The new ship, over 75½ feet in length, was built at Collingwood, and carries almost 1200 passengers at 12 knots.

work is proceeding apace on the Northern Ontario and Rocky Mountain sections of the System, and it is hoped that the Transcontinental line will be completed by the end of next year. In addition to the very fortunate advantage of easy gradients, the line enters a large territory without competition and gives access to a section of the Canadian Alps of great scenic splendor. In the Northern Ontario area capital is only awaiting completion of transportation facilities before entering upon the development of tremendous iron deposits and extensive timber stands. Together with the industrial and agricultural resources of the Great Clay Belt, this whole area is expected to attract and support a population of over two million people. Canadian Northern lines are now in operation as far as Makwa, 25 miles beyond Ruel and some 360 miles from Toronto.

Ruel, by the way, is named after our Chief Solicitor, Mr. Ruel, whom I mentioned previously. It is interesting to note the origin of some of the other station names on the System. As our lines are in many cases built through virgin territory in advance of all settlements we have had difficulty, at times, in picking out suitable names for the stations. All in all, the officers of the Canadian Northern have selected some six hundred names from various sources.

A few of the more outstanding names are:-

Bresaylor, Sask.	Parts of the names of Bremner, Sayers, and Taylor, first settlers in the Nth. Battleford district.
Entwistle, Alta.	After the first locomotive engineer on the original Edmonton, Yukon and Pacific.
Erwood, Sask.	After E. R. Wood, Toronto YMCA leader.
Glenella, Man.	Donald Mann's sister-in-law.
Greenway, Man.	Prominent farmer and Premier of Manitoba.
Laird, Sask.	After the first Governor of the N.W.T.
Vibank, Sask.	Violet Jamieson, daughter of Governor Jamieson of the Bank of Ireland.

and of course,

Canora, Sask.	from the name of our System - CAnadian NOrthern RAilway.

-o-o-o-o-o-o-o-o-o-o-o-

CANADIAN RAILROAD HISTORICAL ASSOCIATION, INC.

News Report No. 64
February 1956

Editorial Address:
P.O. Box 22, Station "B"
Montreal 2, Canada.

Editor: Omer S.A. Lavallee
Asst. Editor: R. Douglas Brown
Committee: Robert R. Brown
Anthony Clegg
Kenneth Chivers
Forster A. Kemp
Ernest Modler
J. Marjoribanks, Jr.

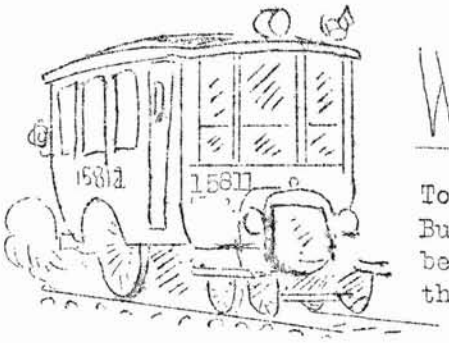

WANTED!

To illustrate a Bulletin which has been promised to the members for a long time, the Editorial Committee would like to obtain photographs of CNR 15811, or any other old time rail car of the motor-bus type; For that matter, we would be interested in seeing any pictures of the more unusual types once used on the CNR and other lines.

THANK YOU !

During the year 1955, the two major Canadian railways scrapped a total of 356 steam locomotives. 220 were scrapped by the Canadian National Railways, 18 by its subsidiaries, the Grand Trunk Western and the Central Vermont, while the Canadian Pacific Railway scrapped 118 units. Numbers of these engines are as follows:

CANADIAN NATIONAL RAILWAYS - Owned Locomotives.

82	1394	2372	2426	2589	3203	3317	3485	5058	6113	7462
94	1398	2378	2428	2591	3208	3321	3493	5059	6117	7466
411	1399	2383	2439	2593	3213	3322	3495	5060	6118	7506
1014	1400	2384	2440	2595	3217	3326	3592	5072	6122	7542
1124	1423	2391	2444	2597	3219	3328	3595	5074	6128	8202
1126	1430	2396	2448	2605	3220	3353	3707	5129	7226	8203
1141	2096	2400	2449	2606	3227	3354	3718	5533	7232	8217
1143	2111	2403	2482	2618	3233	3356	3721	5543	7233	8223
1207	2112	2404	2520	2620	3236	3370	3724	5552	7237	8224
1273	2180	2405	2530	2623	3247	3371	4003	5553	7246	8299
1300	2189	2406	2532	2626	3250	3378	4004	5581	7247	8301
1310	2192	2409	2536	2640	3251	3393	4013	5591	7252	8323
1313	2193	2412	2545	2648	3270	3404	4033	5602	7361	8345
1319	2197	2414	2546	2651	3274	3413	4101	5610	7388	8386
1320	2334	2415	2551	2654	3279	3415	4103	6005	7392	8388
1341	2338	2416	2558	2674	3294	3420	4104	6025	7425	8406
1358	2340	2418	2562	2720	3302	3428	4200	6045	7428	8412
1368	2342	2420	2571	2759	3307	3435	4205	6053	7447	CV 460
1369	2355	2421	2578	3201	3308	3444	5052	6108	7451	" 475
1385	2357	2424	2584	3202	3316	3447	5057	6110	7457	" 603

GRAND TRUNK WESTERN RR

2666	5042	7526	3515
2667	6041	8417	3522
3524	7489	8420	
3749	7492	8422	

CENTRAL VERMONT RR

219
220
455
704

CANADIAN PACIFIC RAILWAY

January - 592, 938, 967, 5765, 6248.
February- 475, 824, 830, 919.
March - 575, 590, 665, 863, 1037, 6913.
April - 3400, 3401, 6255.
May - 901, 3403, 3518, 5802, 6245,
June - 865, 3625, 5763, 5769, 6224, 6294.
July - DAR 470, 820, 850, 1028, 6938,
August - 491, 813, 875, 947, 1000, 1053, 2442, 3513, 3516, 3549, 3553, 6276, 6291, 6911.
September- 433, 586, 838, 860, 889, 898, 900, 917, 940, 950, 958, 1001, 1091, 1103, 3410, 3448, 3481, 3496, 3521, 3554, 3560, 3561, 3619, 3952, 5804, 5812, 6215, 6265, 6281, 6283, 6287, 6292, 6293, 6304, 6951.
October - 420, 450, 466, 477, 526, 650, 738, 831, 848, 849, 874, 943, 957, 1065, 1089, 3511, 5813, 6262, 6263.
November- 427, 449, 472, 854, 873, 881, 921, 997, 1058, 3434, 3479, 3530, 6296.
December- 841, 1093, 6948.

The scrapping of engine 526 in October eliminated the D6 class. This was the only class to disappear as a result of scrapping in 1955.

Our member Mr. J.Norman Lowe, now with Ontario Northland Railway at North Bay advises us that as of the beginning of November steam locomotives 303, 304, 310, 500, 501 and 503 were still in service. In addition, engines 302, 306, 313, 314, 700, 701, 1102 and 1103 were out of service, stored.

ooOooOOoOOooOoo

MONTREAL TRANSPORTATION COMMISSION
ANNOUNCES SWEEPING TRAM TO BUS CHANGEOVER

On February 1st, the Montreal Transportation Commission announced that the largest single changeover from rail to autobus operation in MTC services in Montreal will take place on or about Tuesday, September 4th. The streetcar service will disappear from the following streets:

St.Catherine, from Victoria Avenue to Harbour Street;
Sherbrooke, from Atwater Avenue to Elmhurst Avenue;
Monkland, from Girouard Avenue to Grand Blvd.,
Grand Blvd., from Monkland to Somerled;
Victoria Avenue, from St.Catherine to Sherbrooke;
Greene Avenue, from St.Catherine to Sherbrooke;
Atwater Avenue, from St.Antoine to Sherbrooke;
Windsor Street, from St.James to St.Catherine;
Somerled Avenue, from Grand Blvd., to Walkley Avenue.

As a result, the following tram routes will be discontinued:
ST.CATHERINE 3, 3A, 3X; WINDSOR 70, 83; SHERBROOKE 63, 64, 7A, 9A; GIROUARD 50. Other routes using the streets mentioned will be rerouted. Seven autobus routes will replace these rail lines, at a capital expenditure of approximately $7,500,000 for the purchase of 250 autobuses, the construction of Frontenac Garage, replacing the Hochelaga carhouse, the conversion of the St.Paul carhouse, and the erection of two termini.

At the same time, the MTC released its figures for the year ending November 30th, 1955. Gross revenues $30,427,591. Operating expenses were $31,665,132 leaving a deficit of $1,237,541. Accumulated deficit at November 30, 1955 stood at $2,586,835, the report stated.

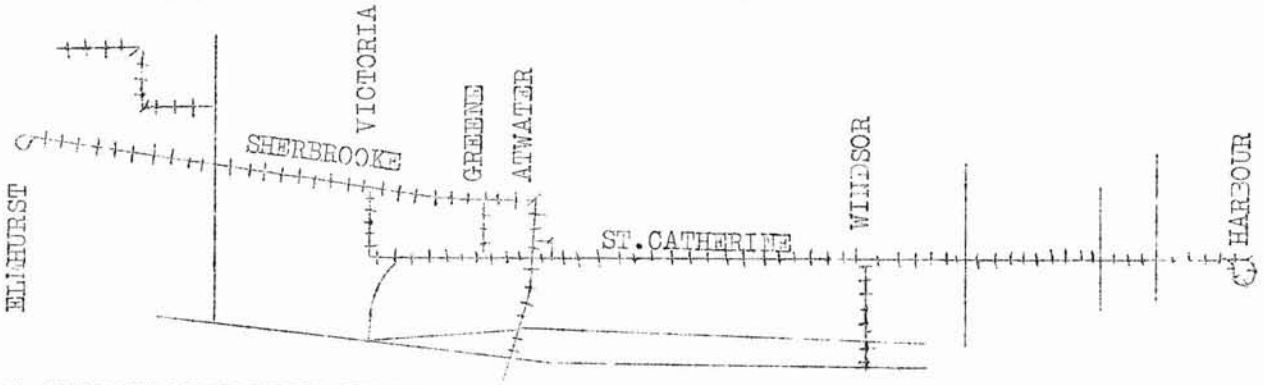

-(O)-

PACIFIC GREAT EASTERN TO CELEBRATE
OPENING OF NEW $10,000,000 LINK

Opening of the Pacific Great Eastern Railway's new $10,000,000, 41-mile rail connection between North Vancouver and Squamish, at the head of Howe Sound in British Columbia, is planned to take place on June 21st of this year. Hundreds of applications for tickets on the first train have been received by the railway company. Completion of the line will mark the realization of a 40-year ambition on the part of the PGE's owners, the British Columbia Provincial Government, to link Vancouver by rail with Prince George and the area to the north, where another PGE extension is presently under way.