2800-2864

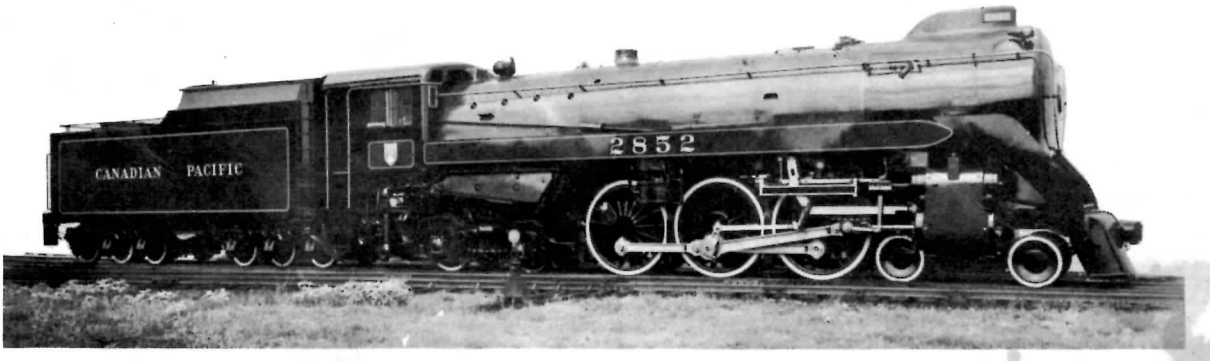

The 4-6-4 types of the Canadian Pacific originated in the demand during the late 1920s for greater capacity in the handling of main-line trains, such as the crack 6½-hour Toronto-Montreal flyers "The Canadian" and "The Royal York", which at this time were the fastest trains in the world, by virtue of their runs between Smiths Falls and Montreal, 124.0 miles in 108 minutes, non-stop, at an average speed of 68.8 miles per hour.

This search for improved motive power, conducted under the able leadership of Mr. C. B. Bowen, C.P.R. Chief of Motive Power, ended in 1929, when Montreal Locomotive Works outshopped No. 2800, first of an order for ten 4-6-4s, to be classed H-1a, and numbered 2800 to 2809. The design was immediately successful, and road tests were scarcely over when a repeat order for an additional ten engines of the same type was placed with Montreal Locomotive Works.

This second group, class H-1b, numbers 2810-2819, was built during 1930, and was identical in all important respects with the originals. Nos. 2811 and 2813 were equipped with boosters, and therefore tipped the scales at 9000 pounds more than their sisters, and exerted an additional 12,000 pounds tractive effort with their boosters cut in.

As the construction of these first twenty Hudsons coincided with the advent of a worldwide depression, no additional motive power was needed for several years. By 1937, however, conditions had improved sufficiently to make it possible to start replacing some of the obsolete power with modern types, and in that year construction was undertaken of a further thirty Hudsons, the largest group of this type to be added at one time. The new recruits form class H-1c and are numbered from 2820 to 2849. By this time, streamlining had become the vogue, and the H-1c's were given a smooth jacket to enclose many of the usual external fittings, together with a cowelled stack combined with smoke deflector, recessed headlight, and solid pilot. Combined with the large vestibuled cab and massive twelve-wheeled tender, and finished in the C.P.R.'s fine passenger engine livery of glossy black, deep red, polished graphite, gold lettering and striping, white wheel tires, and plenty of bright metal, these streamlined Hudsons present a most attractive appearance, a happy blending of modern design with the traditional appeal of the steam locomotive.

Closely following the 1937 group, ten more of the streamliners were built in 1938. These are class H-1d, Nos. 2850-2859, and are similar in all important respects to the H-1c's. During the visit of their Majesties, King George VI and Queen Elizabeth, to Canada in 1939, 2850 was used to haul the Royal train and 2851 the pilot train over the Canadian Pacific portion of their Majesties' tour, and as a result all the streamlined Hudsons soon became known as the Royal Hudsons, and were adorned with regal crowns at the front ends of their running board skirts. 2850 and 2851 made the 3,224 mile trip from Quebec City to Vancouver, in the course of which they were manned by 25 different engine crews. 2850 was later exhibited at the New York World's Fair of 1939.

In 1940, to assist with the heavy wartime traffic, a further, and as events proved, final group of Royal Hudsons was built, all equipped for oil-burning in the Pacific Coast territory. These are class H-1e, Nos. 2860-2864.

While the C.P.R.'s stock of sixty-five Hudsons is divided into five sub-classes, there is very little difference in important specifications, as a perusal of the table on the reverse side of this sheet will show. Although the engines of the first two groups are now seen most often on manifest freight, they still give a good account of themselves at the head end of passenger extras or sections of regular trains. The Royal Hudsons regularly handle either freight or passenger trains with equal facility, and are used on all main lines of the C.P.R., with the exception of that between Montreal and Saint John, N.B. While they were tried out on this route for a short time, it was considered inadvisable to assign them to the eastern run regularly, due to bridge weight restrictions.

As mentioned earlier, the Hudsons have been extremely successful, and have given consistently efficient, reliable service, especially during the difficult days of World War II. Their runs between Winnipeg and Calgary, 841 miles each way, and between Toronto and Fort William, 711 miles, have been, for many years, among the longest regularly-scheduled steam locomotive runs in the world. The standards of performance and availability on these runs, the latter through the toughest operating territory east of the Rockies, have been amazingly high, even though, in recent years, trains have grown far beyond the weights for which these locomotives were designed.

During the latter part of the recent war, there was talk of building more Hudsons, but with the prospect of diminishing traffic following the war, it was felt that a smaller machine would be more generally useful, and the 1200 series of "General Service" Pacifics was built. Now, with the advent of large-scale dieselization, the C.P.R. has announced that no more conventional steam locomotives will be built. In spite of the encroachment of the newer form of motive power, however, many years will pass before Finis must be written to the story of the Canadian Pacific Hudsons, one of the outstandingly successful locomotive designs of all time.

4-6-4 - HUDSON TYPE

CLASS H 1
SUB CLASS H 1 AB
CAPACITY 46%

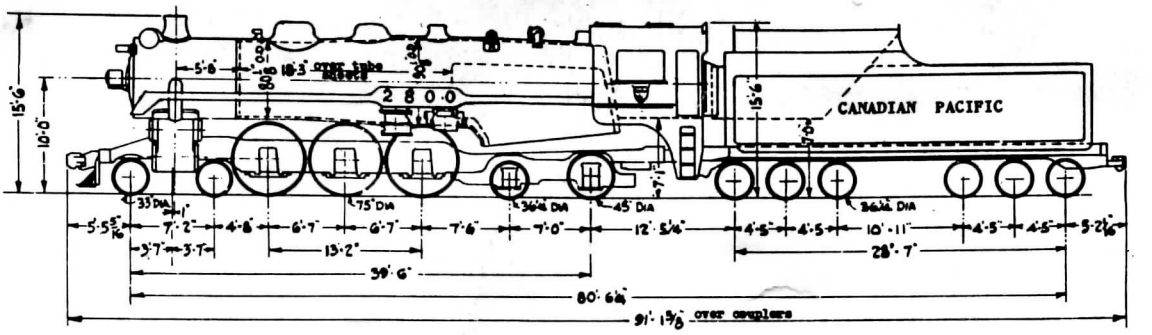

12000 Gal. Tender

AXLE SIZES — Roller Bearings — 10½"x14" — 12"x14" — 10½"x14" — 7"x14" — 8"x14" — H 1 a 6"x11" / H 1 b — Roller Bearings — 6"x11"

4-6-4 - ROYAL HUDSON TYPE

CLASS H 1
SUB CLASS H 1 E
CAPACITY 46%

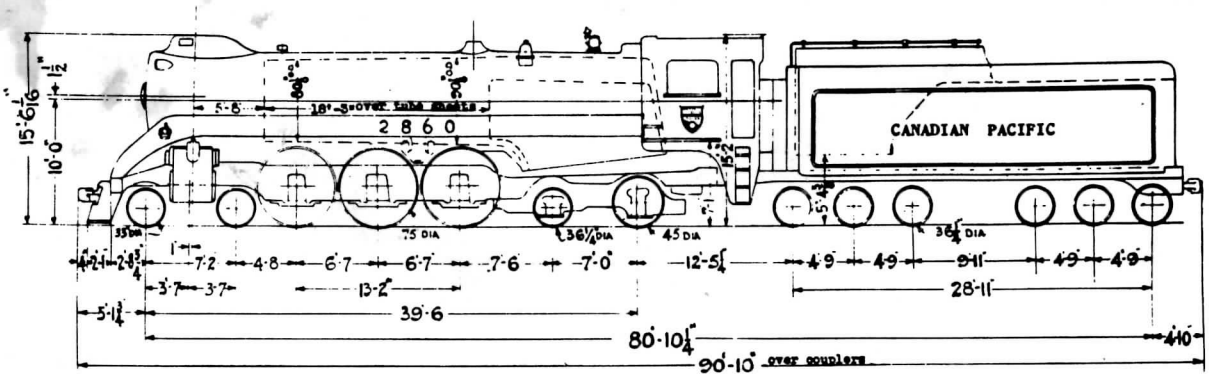

AXLES — ROLLER BEARINGS — 10½"x14" — 12"x14" — 10½"x14" 4" — 7"x14" — 8"x14" — 6"x11" — 6"x11"

SPECIFICATIONS

Numbers	Sub-class	Date Built
2800-2809	H1a	Nov.-Dec., 1929
2810-2819	H1b	Nov.-Dec., 1930
2820-2849	H1c	Sept.-Dec., 1937
2850-2859	H1d	August, 1938
2860-2864	H1e	June, 1940

Builder: Montreal Locomotive Works
Boiler Pressure: - 275 lbs
Cylinders - 22 x 30 ins.
Drivers - 75 ins.
Tractive effort - 45,300 lbs.
(Locomotives with boosters exert 12,000 lbs. extra tractive effort)
Grate area - 80.8 sq. ft.

Heating surface - 5474 sq. ft. (H1a, b)
(Total) - 5333 sq. ft. (H1c, d, e)
Weight on drivers - 194,000 lbs.*
Engine weight - 329,000 lbs. (H1a, b)
- 324,000 lbs. (H1c, d)
- 335,000 lbs. (H1e)
Tender weight - 132,000 lbs. (H1a)
- 138,000 lbs. (H1b)
- 133,000 lbs. (H1c, d)
- 123,500 lbs. (H1e)
Fuel capacity (coal) - 21 tons
(oil) - 4100 Imp. Gals.
Water capacity - 12,000 Imp. Gals.

* H1b with booster weigh 338,000 lbs., H1c, H1d with booster weigh 335,000 lbs.

Locomotives 2860-2864 were built as oil burners; additional engines have been converted subsequently. Locomotives 2811, 2813, 2838-2842, 2850-2854, 2860-2864 have boosters. All coal burning locomotives have stokers. All locomotives have Elesco superheaters, Multiple throttles and one piece engine beds. All locomotives have roller bearings on the pilot truck. Locomotive 2810 is fully equipped with roller bearings on all engine and tender trucks.

UPPER CANADA
RAILWAY SOCIETY,
Box 122, Terminal "A",
Toronto, Ontario
Bulletin 27,
January, 1951

JOINT ISSUE

The ONTARIO SOCIETY OF HO MODEL ENGINEERS

THE ONTARIO SOCIETY OF HO MODEL ENGINEERS,
H. R. Johns, Hon. Secretary,
362 Broadway Avenue,
Toronto 12, Ontario
Supplement to "THE QUILL",
January, 1951